IOTAFLOW
SYSTEMS PVT. LTD

Micro Stream Flow Sensor
OFZ Series User Manual

" If You Want To Manage It, Measure It "

www.iotaflow.com

1 Cautions

(1) Check the flow rate, working pressure, and temperature ranges indicated on the seal or plate and use the product under the appropriate condition.

(2) Do not use in an explosive atmosphere because it is not explosion-protected.

(3) Connect the pipes so that they do not apply stress to the joint parts
(It is recommended to use tube pipes using hose joints).

(4) Ensure that the fluid must be anticorrosive against the wetted part of the sensor
(Hydrochloric acid, sulfuric acid, nitrates, sodium hypochlorite, and/or similar chemicals cannot be used).

2 Piping and installation

(1) The product can be installed in a vertical or horizontal pipe as far as its seal is perpendicular to the ground.

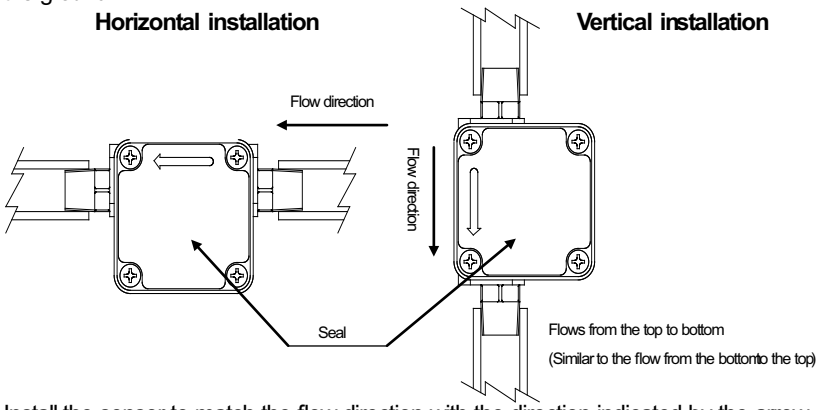

(2) Install the sensor to match the flow direction with the direction indicated by the arrow on the product. Be careful not to allow air ingress into flow.

(3) Avoid installing the flowsensor where it is exposed to a direct sunlight or rain drops (indoor specifications).

(4) Be careful not to allow foreign substances (e.g., shavings of pipes, pieces of sealing tape) to enter the pipe. Do not remove the protection cap at the joint ends until installing the product.

(5) Fluid containing foreign substances cannot be measured. If they can be mixed in the fluid, use a strainer of 80 mesh or finer to remove them.

(6) Pulsating flow (i.e. reverse flow) can affect the measurement accuracy.
Use an accumulator or non-return valve to cancel the pulsation.

(7) Do not install the product near a noise source such as strong radio wave, magnetic field, induction voltage, spark noise, etc. The internal magnetic sensor may malfunction.

(8) The recommended tightening torque at piping is 5 ± 2 N·m for DN05, and 7 ± 2 N · m for DN10.

3 Cabling

<OF Z T-AR model: 3-wire magnetic sensor, voltage pulse output>

(1) Apply the power supply voltage of 3 to 24 VDC to the red (+) and black (-) lines. Signals are output between the white (signal +) and black lines as voltage pulses.

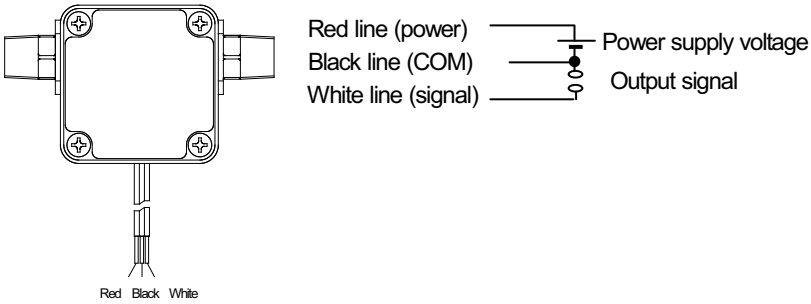

(2) Output signal waveform

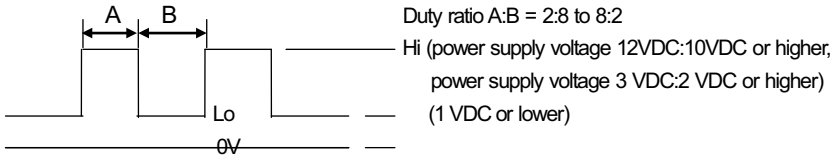

<OF Z T-MR model: 4-wire magnetic sensor, open collector pulse output>

(1) Apply the power supply voltage of 3 to 24 VDC to the red (+) and black (-) lines.
Signals are output between the white (signal +) and black lines as open collector pulses.
Short-circuit the blue line (feedback) to the white line.
Connect a pull-up resistance of 50 kΩ or less so that the output sink current is becomes 6 mA or lower (Is[mA] = Power supply voltage [V] / R[kΩ]).

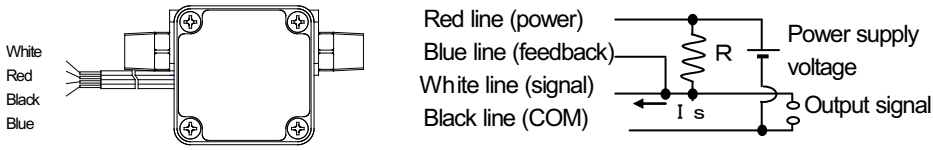

(2) Output signal waveform

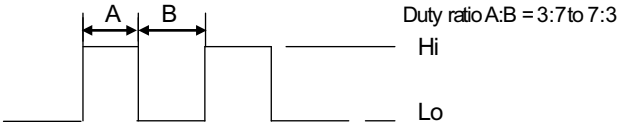

4 Model code

OF	**	Z	*	T	-	*	R	Description
Model								Small size flow sensor
	Size							05: 5 mm 10: 10 mm
		Z						Z
			Fluid					A: Cold/hot water, fuel oil Z: Pure water, chemical fluid
				T				T
					-			-
						Output		A: Voltage pulse (3-wire) M: Open collector (4-wire)
							R	RoHS-Compliance

5 External dimensions

<OF Z T-AR model>

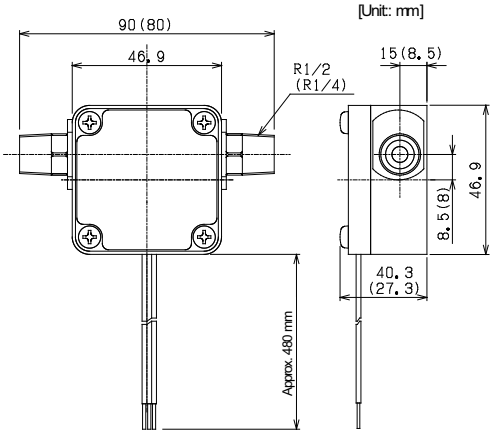

<OF Z T-MR model>

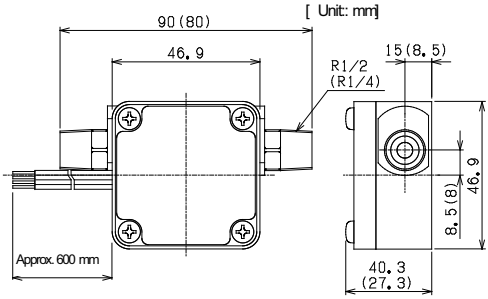

Figures in ( ) are for OF05. Those without figures in ( ) are common to all models.

6 Specifications

Item		OF05ZAT-AR, MR	OF05ZZT-AR, MR	OF10ZAT-AR, MR	OF10ZZT-AR, MR
Measurement Fluid		Cold and hot water, kerosene, diesel oil, fuel oil, etc	Pure water, slightly acid solution, weak alkaline solution, etc	Cold and hot water, kerosene, diesel oil, fuel oil, etc	Pure water, slightly acid solution, weak alkaline solution, etc
Flow rate range		Fluid viscosity 0.3 to 0.8mPa·s:5 to 50L/h		Fluid viscosity 0.3 to 0.8mPa·s:40 to 300L/h	
		Fluid viscosity 0.8 to 2mPa·s:3 to 50L/h		Fluid viscosity 0.8 to 2mPa·s:20 to 300L/h	
		Fluid viscosity 2 to 5mPa·s:1 to 50L/h		Fluid viscosity 2 to 5mPa·s:10 to 300L/h	
		Fluid viscosity 5 to 20mPa·s:0.5 to 50L/h		Fluid viscosity 5 to 20mPa·s: 5 to 300L/h	
Accuracy		±2%R.S.			
Maximum pressure		0.5 MPa			
Pressure loss		4 kPa or less		10 kPa or less	
Fluid temperature range		-10 to +70℃ (no freezing)			
Environmental temperature and humidity		-10 to +70℃ 35 to 85%RH (no dewing)			
Output signal		OF**Z*T-AR: Voltage pulse (3-wire), OF**Z*T-MR: Open collector (4-wire)			
Output pulse factor		0.46 mL/P		2.5 mL/P	
Maximum frequency		Approx. 30 Hz		Approx. 33 Hz	
Minimum pulse width		Approx. 0.0065 s		Approx. 0.006 s	
Power consumption		0.2VA or less			
Structure		Splash-proof structure (IP64 equivalent)			
Connection Size		R1/4		R1/2	
Weight		Approx. 100 g		Approx. 140 g	
Wetted Part Material	Case	PPS			
	Rotor	PPS			
	Plate	PPS			
	O-ring	NBR	FKM	NBR	FKM
	Shaft	SUS304	SiC	SUS304	SiC

7 Warranty

- Warranty period

One year after the dispatch date from Aichi Tokei Denki facility.

- Warranty scope

We are making every effort to produce our products with high quality, however if a defect which is subject to our liability should occurs during the warranty period under normal use, we shall repair the product or replace it with a normal product for free.

Please understand that we shall determine whether the free remedy shall apply to your situation after our investigation of the product.
Also please understand that the free remedy shall not be applied to a defect

(1) Caused by use which dose not follow the instructions given in our catalog, product specifications, and/or handling manual,
(2) Caused by a disaster such as a fire, earthquake, storm, flood, or lightening, or a destructive act such as a crime,
(3) Caused by corrosion due to use in a corrosive environment,
(4) Caused by act of animals such as a dog, cat, rat, or insect,
(5) Caused by a factor other than our product,
(6) Which could not be foreseen with the science and technology levels at the time of shipment,
(7) Caused by repair or alteration other than done by or specified by us, and/or
(8) Caused by an inappropriate inspection and/or maintenance or replacement of a consumables.

Please note that "warranty" in this context means warranty for our product alone and we shall not reliable for any damage resulting from a defect of our product, including but not limited to a damage to equipment other than our product, loss of profit, loss of opportunity, transportation fee, and construction fee.

IOTAFLOW
SYSTEMS PVT. LTD

Micro Stream Flow Sensor
OFZ Series User Manual

Contact Us:-

IOTAFLOW SYSTEMS PVT. LTD.

C-2/13, Mayapuri Industrial Area
Phase-II, New Delhi - 110064
Call: +91-9910693866
+91-9779085987
Email: contact@iotaflow.com

Specifications subject to change without prior notice. © Iotaflow Systems Pvt. Ltd.

" If You Want To Manage It, Measure It "

www.iotaflow.com